US006407667B1

(12) **United States Patent**
Jackson et al.

(10) **Patent No.: US 6,407,667 B1**
(45) **Date of Patent: *Jun. 18, 2002**

(54) **ALARM SYSTEM FOR FORGOTTEN GOLF CLUB**

(76) Inventors: **Susan M. Jackson**; **Robert A. Jackson**, both of 10100 Hobby Hill Rd., Richmond, VA (US) 23235; **John M. Davis**, 12418 Queensgate Rd., Midlothian, VA (US) 23113

(*) Notice: Subject to any disclaimer, the term of this patent is extended or adjusted under 35 U.S.C. 154(b) by 0 days.

This patent is subject to a terminal disclaimer.

(21) Appl. No.: **09/522,650**

(22) Filed: **Mar. 10, 2000**

Related U.S. Application Data

(63) Continuation of application No. 09/161,070, filed on Sep. 25, 1998, now Pat. No. 6,040,772.

(51) **Int. Cl.**[7] **G08B 13/14**

(52) **U.S. Cl.** **340/568.6**; 340/539; 340/693.1; 340/571; 340/568.1; 473/282

(58) **Field of Search** 340/568.1, 568.6, 340/571, 572.1, 539, 693.1, 693.5, 693.9, 636, 567; 206/315.3; 473/408, 283, 282

(56) **References Cited**

U.S. PATENT DOCUMENTS

5,529,299 A * 6/1996 Bellagamba 473/285
5,565,845 A * 10/1996 Hara 340/568
5,610,585 A * 3/1997 Jobe 340/568
5,689,240 A * 11/1997 Traxler 340/573
5,769,740 A * 6/1998 Colanelo 473/408
5,801,627 A * 9/1998 Hartung 340/568
5,841,352 A * 11/1998 Prakash 340/573
5,844,483 A * 12/1998 Boley 340/568
5,877,686 A * 3/1999 Ibey 340/571
6,040,772 A * 3/2000 Jackson et al. 340/568.6

* cited by examiner

Primary Examiner—Anh La

(57) **ABSTRACT**

An alarm system is provided for alerting a golfer about a forgotten club. A divot tool incorporates a radio transmitter powered by a rechargeable power source for transmitting a coded transmission. A radio receiver tuned to receive the coded transmission includes logic circuitry that generates an alarm signal whenever power associated with the coded transmission drops below a threshold level. One or more alarm devices are coupled to the logic circuitry to generate alarm(s) when the alarm signal is supplied thereto. A power source is coupled to the radio receiver for supplying power thereto and for supplying a charging current for the rechargeable power source via an electrical coupling. When a golfer places a club or other accessory on the ground, the divot tool is placed near the club. As long as the golfer remains within a prescribed range, no alarm will be activated. However, if the golfer moves further from the divot tool than the prescribed range, an alarm is produced. Alerted to his forgetfulness before leaving the vicinity, the golfer then simply retrieves the club and divot tool.
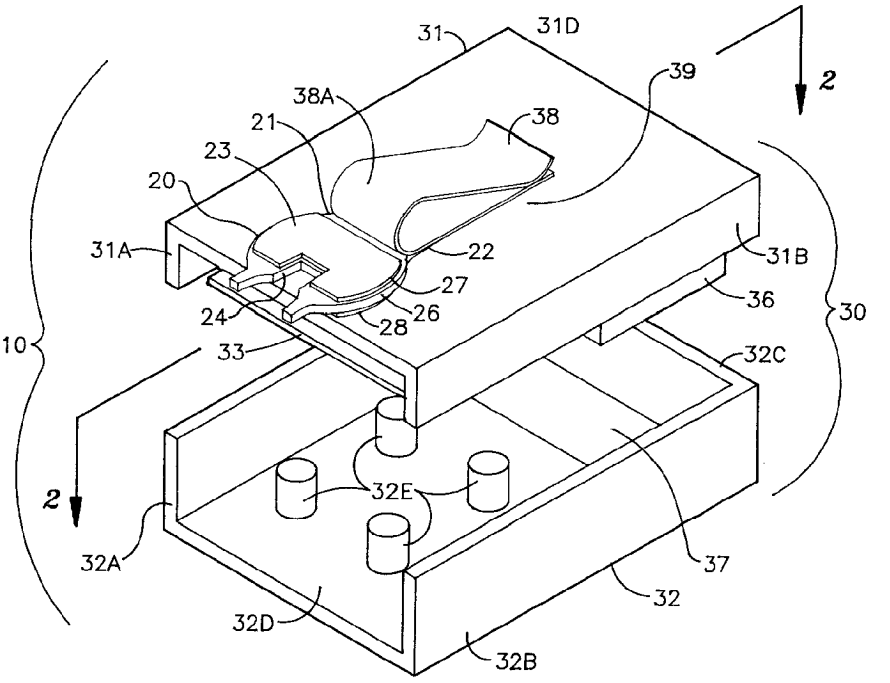
9 Claims, 4 Drawing Sheets